Industrial Rigging & Supply | Lifting Solutions Group Axel Johnson International

Fast Reeve Crane Blocks 6 sheave

Product information



General:
- Standard Reeve Crane Blocks may be used on a wide variety of land based cranes such as mobile and crawler cranes. They are an excellent choice where frequent block change is required.
- Double sealed maintenance free roller bearings.
- Design Factor of Safety of 4:1.
- Forged high tensile steel DIN hooks.
- Ductile iron sheaves, featuring graphite lubricated groove.
- High impact resistant side plates.
- Operational temperature range -40 up to +80°C.
- Lubrication on hook suspension.
- 4 or 8 point hook locking device.
- Fast reeve guide for fast reeving.
- Safety latch with locking pin.
- C3M finish in signal yellow with black striping.

Options:
- Double hook.
- Double hook with shackle hole.
- Quad hook.
- Shackle stud eye.

Important:
Inquiries for custom versions are welcome!

... *Read more*

Safety factor: 4:1

© November 2026 - All Rights Reserved

Industrial Rigging & Supply | Lifting Solutions Group Axel Johnson International

Fast Reeve Crane Blocks 6 sheave

Blueprint

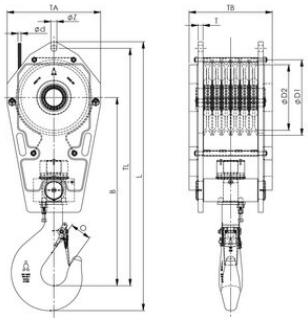

Technical data

Part code	WLL (metric) tonnes	Model	Rope Ø mm	Sheave dia. mm	Hook size	B in	L in	O in	T in	TA in	TB in	TLmm in	Ø D1 mm in	Ø D2 mm in	Ø Z mm in	Weight lb
6097FRB36019663EA	63	FRB 360 .19 .6 .63 .E .A	19	420 / 360	16	38.31	-	3.82	1.18	20.08	20.55	48.94	16.54	14.17	1.46	1,499.14
6097FRB36019663EB	63	FRB 360 .19 .6 .63 .E .B	19	420 / 360	16	38.31	-	3.82	1.18	20.08	20.55	48.94	16.54	14.17	1.46	1,598.35
6097FRB40019663E	63	FRB 400 .19 .6 .63 .E	19	460 / 400	16	41.85	-	3.82	1.18	22.44	19.96	53.66	18.11	15.75	1.46	1,708.58
6097FRB40019680E	80	FRB 400 .19 .6 .80 .E	19	460 / 400	20	45.16	62.87	4.33	1.18	22.44	19.96	56.97	18.11	15.75	1.69	1,807.79
6097FRB40022680E	80	FRB 400 .22 .6 .80 .E	22	460 / 400	20	45.16	62.87	4.33	1.57	22.44	19.96	56.97	18.11	15.75	1.69	1,807.79
6097FRB45022680E	80	FRB 450 .22 .6 .80 .E	22	515 / 450	20	46.73	68.11	4.33	1.57	23.62	19.76	62.2	20.28	17.72	1.69	2,006.21
6097FRB45024680E	80	FRB 450 .24 .6 .80 .E	24	515 / 450	20	46.73	68.11	4.33	1.77	23.62	19.76	62.2	20.28	17.72	2.05	2,006.21
6097FRB450246100E	100	FRB 450 .24 .6 .100 .E	24	515 / 450	25	49.72	69.61	5.2	1.77	23.62	22.91	62.91	20.28	17.72	2.05	2,502.25
6097FRB450266100E	100	FRB 450 .26 .6 .100 .E	26	515 / 450	25	49.72	69.61	5.2	1.77	23.62	22.91	62.91	20.28	17.72	2.05	2,502.25
6097FRB528246150E	150	FRB 528 .24 .6 .150 .E	24	596 / 528	40	61.14	87.87	6.57	1.77	27.95	25.28	79.53	23.46	20.79	2.05	3,968.32
6097FRB528266150E	150	FRB 528 .26 .6 .150 .E	26	596 / 528	40	61.14	87.87	6.57	1.77	27.95	25.28	79.53	23.46	20.79	2.05	3,968.32
6097FRB528286150E	150	FRB 528 .28 .6 .150 .E	28	596 / 528	40	61.14	88.27	6.57	1.97	27.95	25.28	79.92	23.46	20.79	2.32	3,968.32
6097FRB528266160E	160	FRB 528 .26 .6 .160 .E	26	596 / 528	40	62.24	85.75	6.57	1.77	27.95	26.85	77.4	23.46	20.79	2.05	5,004.5
6097FRB528286160E	160	FRB 528 .28 .6 .160 .E	28	596 / 528	40	62.24	86.14	6.57	1.97	27.95	26.85	77.8	23.46	20.79	2.32	5,004.5

© November 2026 - All Rights Reserved

Industrial Rigging & Supply | Lifting Solutions Group Axel Johnson International

Fast Reeve Crane Blocks 6 sheave

Technical data

Part code	WLL (metric) tonnes	Model	Rope Ø mm	Sheave dia. mm	Hook size	B in	L in	O in	T in	TA in	TB in	TLmm in	Ø D1 mm in	Ø D2 mm in	Ø Z mm in	Weight lb
6097FRB575286200E	200	FRB 575 .28 .6 .200 .E	28	650 / 575	50	65.39	91.22	7.4	1.97	30.31	23.7	81.93	25.59	22.64	2.32	5,004.5
6097FRB670286235E	235	FRB 670 .28 .6 .235 .E	28	760 / 670	50	67.56	96.14	7.4	1.97	34.25	37.48	86.85	29.92	26.38	2.32	9,171.24
6097FRB670326235E	235	FRB 670 .32 .6 .235 .E	32	760 / 670	50	67.56	96.14	7.4	2.36	34.25	37.48	86.85	29.92	26.38	2.6	9,171.24

© November 2026 - All Rights Reserved